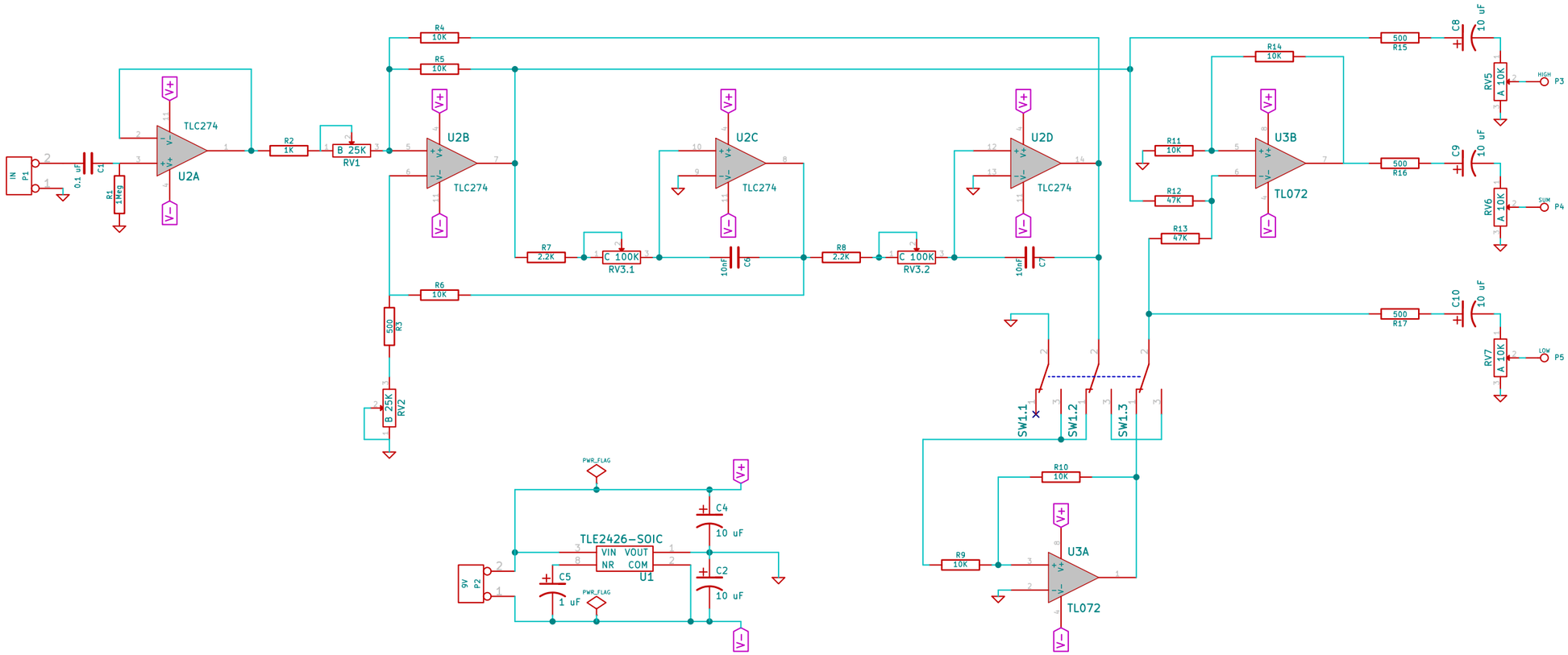
IN
P1
0.1 uF
C1
R1
1Meg
TLC274
U2A
R2
1K
B 25K
RV1
R4
10K
R5
10K
U2B
TLC274
R6
10K
500
R3
B 25K
RV2
R7
2.2K
C 100K
RV3.1
U2C
TLC274
10nF
C6
R8
2.2K
C 100K
RV3.2
U2D
TLC274
10nF
C7
R11
10K
R12
47K
R13
47K
R14
10K
U3B
TL072
500
R15
C8
10 uF
RV5
A 10K
HIGH
P3
500
R16
C9
10 uF
RV6
A 10K
SUM
P4
500
R17
C10
10 uF
RV7
A 10K
LOW
P5
SW1.1
SW1.2
SW1.3
R10
10K
R9
10K
U3A
TL072
PWR_FLAG
C4
10 uF
TLE2426-SOIC
VIN VOUT
NR COM
U1
C5
1 uF
C2
10 uF
9V
P2